NOTES:

1. ALL DIMENSIONS SHOWN IN TABLE ARE IN INCHES, UNLESS OTHERWISE NOTED & ARE ± 1 INCH (25MM).
2. ALL ITEMS SHOWN IN PHANTOM LINE ARE TO BE PROVIDED BY OTHERS.
3. ALL DIMENSIONS ARE SUBJECT TO CHANGE WITHOUT ANY NOTICE.
4. INSTALL UNIONS FITTINGS ON INLET, OUTLET & DRAIN PLUMBING CONNECTIONS.
5. PROVIDE A 2 FEET MINIMUM CLEARANCE ABOVE MINERAL TANK FOR FILLING MEDIA.
6. A GFCI EQUIPT ELECTRICAL OUTLET SHOULD BE PROVIDED WITHIN 5 FEET OF EQUIPMENT LOCATION.
7. USE DIELECTRIC UNIONS ON PLUMBING CONNECTIONS OF CONTROL VALVE WHEN DISSIMILAR METALS ARE PRESENT.
8. PROVIDED SYSTEM SHALL NOT BE SUBJECT TO ANY VACUUM. IF RISK OF VACUUM IS PRESENT, INSTALL SIPHON BREAK ON DRAIN LINE & INSTALL VACUUM RELIEF VALVE WATTS ORDERING CODE # 0556031 ON INLET LINE.
9. BRINE TANK DIMENSIONS SHOWN ON TABLE ARE FACTORY SELECTED FOR USE WITH THE SPECIFIED SYSTEM SIZE.
10. DO NOT INSTALL DRAIN LINE DIRECTLY TO A DRAIN. FOR PROPER DRAIN CONNECTION FOLLOW ALL NATIONAL, STATE AND LOCAL CODES. DO NOT CONSTRUCT DRAIN LINE TO ELEVATIONS THAT EXCEED 4 FEET ABOVE THE CONTROL VALVE'S DRAIN PORT.
11. THE FULL WEIGHT OF THE PIPING AND VALVES MUST BE SUPPORTED BY PIPE HANGERS OR OTHER MEANS.
12. INLET AND OUTLET HEADERS NEED TO BE SIZED ACCORDING TO FLOW RATE REQUIREMENTS BY OTHERS.
13. POWER REQUIREMENTS: 115V/60HZ 2.7 AMPS PER CONTROL VALVE UNLESS OTHERWISE SPECIFIED.
14. BRINE TANK MUST BE LOCATED WITHIN 10 FEET OF SYSTEM CONTROL VALVE AND ON A COMMON FLOOR ELEVATION WITH MINERAL TANK TO ENSURE PROPER BRINE DRAW OPERATION.
15. USE FACTORY SUPPLIED BRINE TUBING. DO NOT USE SMALLER DIAMETER TUBING THAN WHAT IS SUPPLIED.
16. LIMIT INLET PRESSURE TO NOT EXCEED MAXIMUM PUBLISHED OPERATING PRESSURE.
17. 2" NHWBP IS ONLY INCLUDED IN MULTIPLE PROGRESSIVE TANK SYSTEMS, DUPLEX AND TRIPLEX.

SERIES CWS-200HF PROGRESSIVE SYSTEMS DIMENSION (INCHES) & SPECIFICATIONS

MODEL NO.	ORDERING CODES (EDP NO.)	MINERAL TANK SIZE	INLET	OUTLET	OVERALL HEIGHT (SEE NOTE 5)	OVERALL DEPTH	OVERALL WIDTH	MINIMUN INLET PIPE DISTANCE	BRINE TANK (SEE NOTE 9)	CONTROL VALVE INLET/OUTLET PIPE SIZE (NPT)	DRAIN CONN SIZE (NPT)	SERVICE FLOW GPM @ 15 PSI DROP	PEAK SERVICE FLOW GPM @ 25 PSI DROP	DRAIN FLOW RATE (GPM)	MIN/MAX OPERATING TEMP F°	MIN/MAX OPERATING PRESSURE (PSI)	ESTIMATED OPERATING WEIGHT (LBS)	ESTIMATED SHIPPING WEIGHT (LBS)
M4558WH-NH	68110445	24 X 72	77.25	79.68	84.0	24	24.3	13.5	30 X 50	2.0	1.0	75	97	15.0	34/110	25/125	2996	710
M4559WH-NH	68110446	30 X 72	77.25	79.68	84.0	30	30.3	16.5	39 X 48	2.0	1.0	88	113	25.0	34/110	25/125	4717	1160
M4560WH-NH	68110447	36 X 72	77.25	79.68	84.0	36	36.3	22.5	39 X 48	2.0	1.0	97	126	35.0	34/110	25/125	6206	1560
M4558WHTI-NH	68110800	24 X 72	77.25	79.68	84.0	24	24.3	13.5	30 X 50	2.0	1.0	120	194	15.0	34/110	25/125	5992	1420
M4559WHTI-NH	68110801	30 X 72	77.25	79.68	84.0	30	30.3	16.5	39 X 48	2.0	1.0	160	200	25.0	34/110	25/125	9434	2320
M4560WHTI-NH	68110802	36 X 72	77.25	79.68	84.0	36	36.3	22.5	39 X 48	2.0	1.0	168	210	35.0	34/110	25/125	12412	3120
M4558WHTR-NH	68110808	24 X 72	77.25	79.68	84.0	24	24.3	13.5	30 X 50	2.0	1.0	165	291	15.0	34/110	25/125	8988	2130
M4559WHTR-NH	68110809	30 X 72	77.25	79.68	84.0	30	30.3	16.5	39 X 48	2.0	1.0	232	300	25.0	34/110	25/125	14151	3480
M4560WHTR-NH	68110810	36 X 72	77.25	79.68	84.0	36	36.3	22.5	39 X 48	2.0	1.0	239	315	35.0	34/110	25/125	18618	4680

WATTS® 815 CHESTNUT ST. NORTH ANDOVER, MA 01845

THIS DRAWING DISCLOSES CONFIDENTIAL AND OTHER DATA OF A PROPRIETARY NATURE OWNED BY WATTS WATER TECHNOLOGIES, INC AND MAY NOT BE USED OR DISCLOSED TO OTHERS WITHOUT THE PRIOR WRITTEN CONSENT OF WATTS WATER TECHNOLOGIES, INC.

DWG BY:	DATE:	SCALE:	SUPERSEDES:
DC	7/25/2023	NTS	SEE TABLE
CHD BY: JR	DATE: 7/25/2023	SHEET: 1 OF 1	

LIMITS UNLESS SPECIFIED
FRACTIONAL ANGULAR ±1/32 ±1°
DECIMAL in[mm] .XX[0.XX] ± .125[3.175] .XXX[.X] ± .25[6.35]
COMMON AXIS in[mm] 2°[50.38] TIR
SURFACE FINISH µin[µmeter] 125[3.2] RMS
DO NOT SCALE DRAWING

TITLE: GENERAL INSTALLATION, SERIES CWS-200HF PROGRESSIVE SYSTEMS 2" WATER SOFTENERS

PART NO.: SEE TABLE

MATERIAL: N/A

EDP NO.: SEE TABLE

SIZE: D

REV: 3

OTHER: ESTIMATED WEIGHT: SEE TABLE

FILE TYPE: CAD

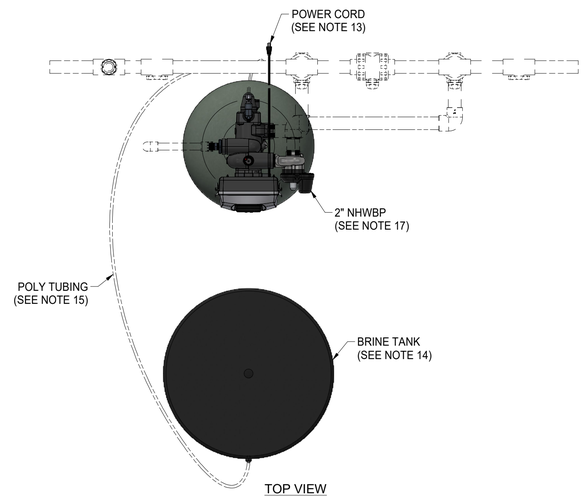

TOP VIEW

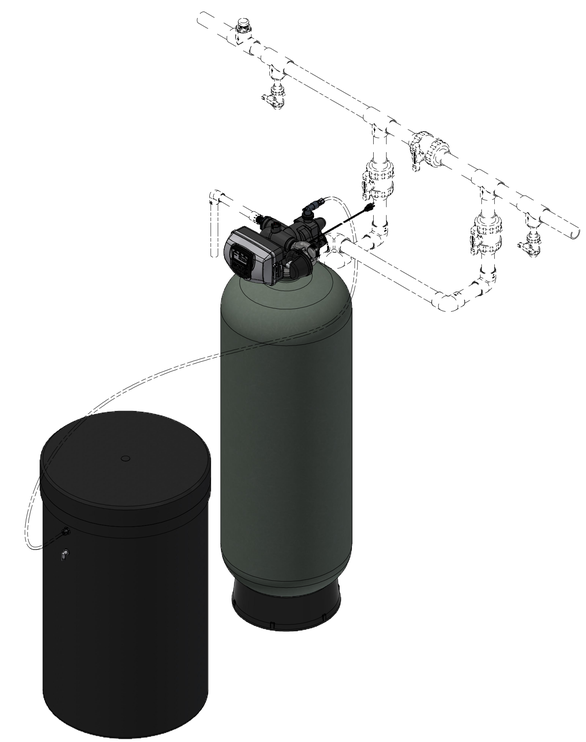

ISOMETRIC VIEW

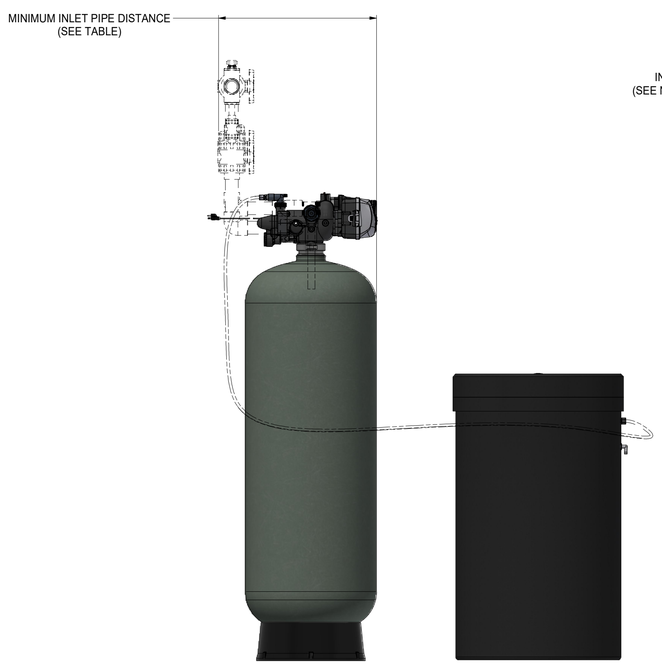

SIDE VIEW

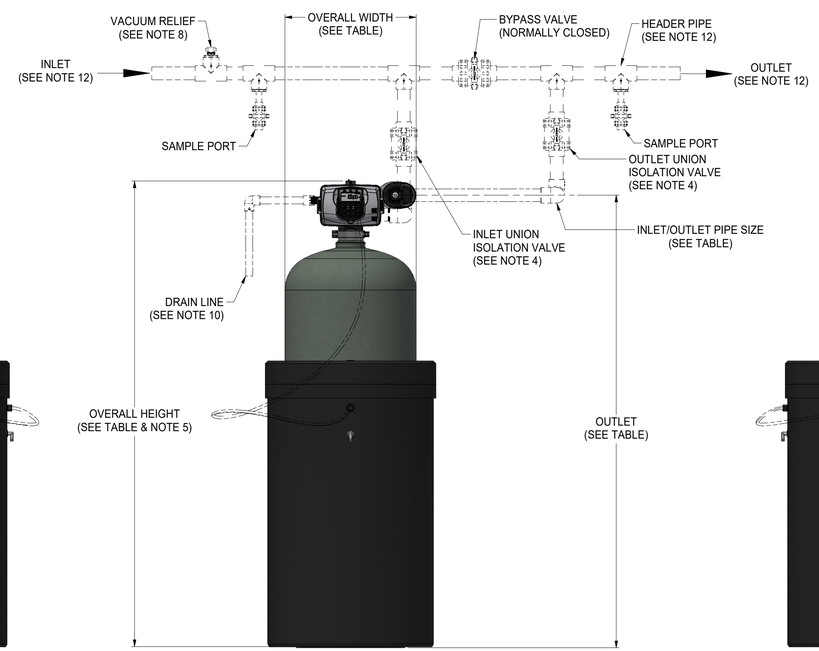

FRONT VIEW

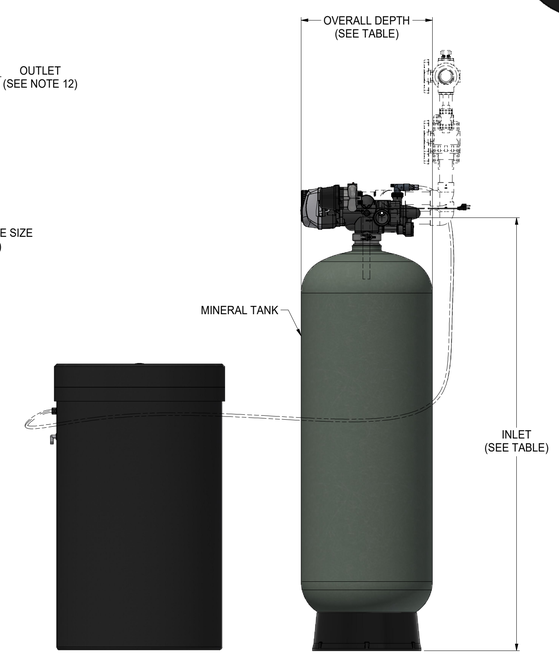

SIDE VIEW

CLIENT PROJECT SIGN-OFF
JOB NAME:
JOB LOCATION:
CONTRACTOR:
CONTRACTOR APPROVAL:
CONTRACTOR APPROVAL DATE:
CONTRACTOR PO NO:
ENGINEER:
ENGINEER APPROVAL:
ENGINEER APPROVAL DATE: